MICROSTRUCTURE STUDY AND CRYSTALLINE PHASE FORMATION ON Nb_2O_5-$Ba_9Ti_2O_{20}$ MICROWAVE RESONATORS

Maria do Carmo de A. Nono[1], and Pedro José de Castro[2]

[2]Laboratório Associado de Sensores e Materiais - LAS
Instituto Nacional de Pesquisas Espaciais - INPE
C.P. 515 - 12201-970 - São José dos Campos, SP - E-mail: maria@las.inpe.br

[1]Laboratório Associado de Plasma - LAP
Instituto Nacional de Pesquisas Espaciais - INPE
C.P. 515 - 12201-970 - São José dos Campos, SP - E-mail: castro@plasma.inpe.br

Keywords: dielectric resonators, crystalline phases, microstructures, microwave measurements

ABSTRACT

We report on the development of barium nanotitanate ($Ba_2Ti_9O_{20}$) dielectric resonators (DRs) for microwave applications and their characterization regarding ceramic and high-frequency dielectric properties. Those DRs should meet the requirements of the dielectric constant as well as the quality factor high values and frequency high stability, for application as local oscillator of an INPE Communication Satellite. The ceramic were prepared using suitable powder mixtures composed of 0.818 $BaCO_3$–0.182 TiO_2 without and with addition of some contents of Nb_2O_5 (0.1, 0.2 and 0.4 % mol), compacted by isostatic pressing with 300 MPa and sintering at 1360°C in appropriate atmosphere. The initial powders and the sintered ceramics were characterized by X-rays diffraction and scanning electronic microscopy. The values of dielectric constant, resonance frequency, loaded quality factor due to the dielectric losses, and coefficient of frequency variation with the temperature was obtained using a special metallic box for these measurements. The comparative analyses of these results showed that the Nb_2O_5 content increases the amount of the formed phase $Ba_2Ti_9O_{20}$ and the ceramic densification degree.

1. INTRODUCTION

Several kinds of dielectric ceramic have been developed for applications in microwave telecommunication and satellite broadcasting systems [1-7]. These ceramics possess a high dielectric constant, low dielectric losses, small temperature coefficient of the resonant frequency and small specific weight. In a near future, dielectric ceramic are expected to have greater use in wireless cables, high definition and interactive TVs, global positioning systems and in many other kinds of personal communication systems [2,4]. Several ceramic compositions based on barium and titanium compounds [1-3] have presented good dielectric properties, such as $BaTi_4O_9$, $BaTi_5O_{11}$, and $Ba_2Ti_9O_{20}$.

This research work represents one of the first attempts in order to produce DRs with Brazilian raw materials. Such DRs can be used for application as local oscillator of a Communication Satellite operating in C-band whose construction will involve INPE.

According to phase equilibrium diagram of the BaO - TiO_2 system (Fig. 1(a)), the stability region of the $Ba_2Ti_9O_{20}$ phase occurs in a narrow range of composition. For temperature lower than 1300°C and 81.8 mol % TiO_2 and 18.8 mol % BaO is possible to obtain the $Ba_2Ti_9O_{20}$ phase [1].

The behavior the dielectric characteristics as function of the density of the $Ba_2Ti_9O_{20}$ ceramic is shown in the Fig. 1(b) curves. The dielectric constant (ε) and quality factor high (Q) values were increased proportionally to the density. The frequency high stability (τ_f) curve shows an inverse behavior in relation to the others. However, according to those results, dielectric parameter values are affected by the ceramic porosity content.

According to the research referred in [4], additions such as Nb, Ca or Ta in the $Ba_2Ti_9O_{20}$ ceramics improve their dielectric characteristics. But in the literature there is not reference about the influence of these chemical elements on the porosity of these ceramics.

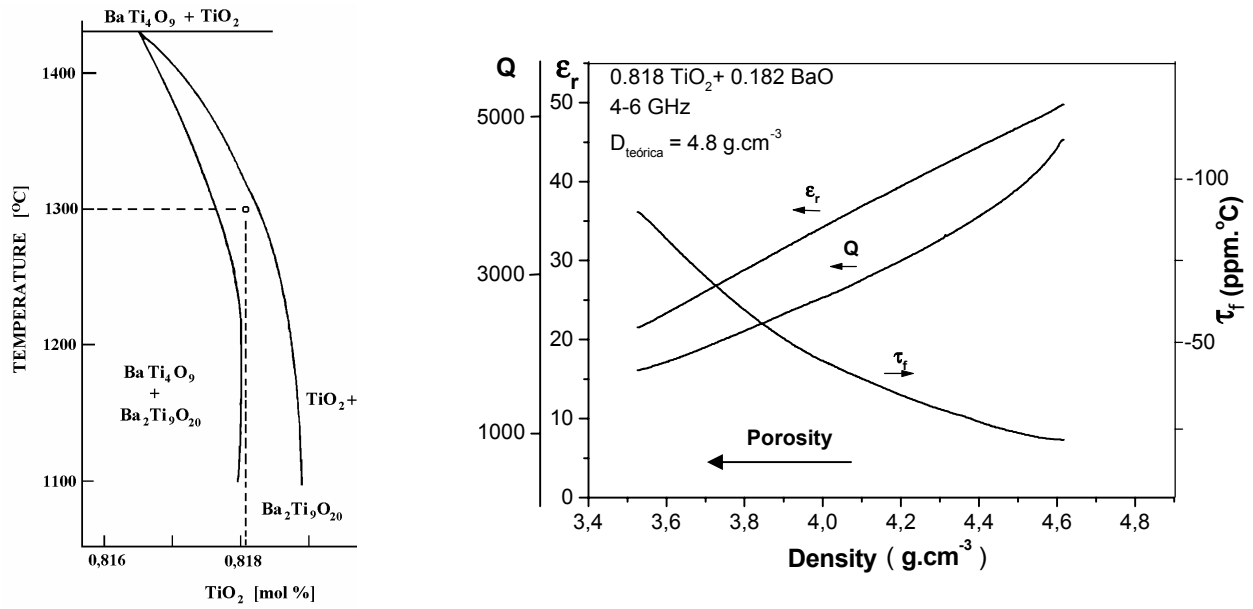

(a) **(b)**

Figure 1. (a) Phase equilibrium diagram for $Ba_2Ti_9O_{20}$ region from 1100 to 1400°C of the system BaO-TiO_2 [1] and (b) effect of density on the dielectric characteristics of $Ba_2Ti_9O_{20}$ ceramic [1,5]

The present research work intends to study $Ba_2Ti_9O_{20}$ DRs manufactured from Brazilian raw materials, as well as the influence of Nb contents (0.2 and 0.4 mol %) on phase amounts, microstructure and microwave dielectric parameters.

2. EXPERIMENTAL PROCEDURE

For the preparation of this type of $Ba_2Ti_9O_{20}$ ceramic was used 0.182 BaO and 0.818 TiO_2 mol composition fraction, from $BaCO_3$ and TiO_2 suitable mixtures. The mixtures received an addition of different amounts of Nb (as Nb_2O_5). The Nb mol percentages added to the initial powder mixture were: 0.2 and 0.4 mol % (or weight %). The powder mixture was compacted by a uniaxial (40 MPa) and an isostatic (300 MPa) pressing, producing cylindrical test bodies with relationship pre-established H/D (where H is height and D the diameter of the test body), in order to produce sintered ceramics with suitable dimensions for the desired resonant frequency range. The samples were sintered at 1360°C for 3 hours. Afterwards, the ceramic crystallographic phases were characterized by X-ray diffraction.

The values of the dielectric parameters were measured at microwave frequencies: resonant frequency (f), dielectric constant (ε), loaded quality factor (Q_L), and temperature coefficient (τ_f).

Microwave characteristics were determined using a test cavity [6,7]. The microwave measurements are performed according to the test setup shown in Fig. 2.

In these tests we do not use any temperature compensation technique. The resonant frequencies were written down right away after every five degree temperature in the experiments. The frequency counter should have an accuracy of at least 10 kHz in the GHz range.

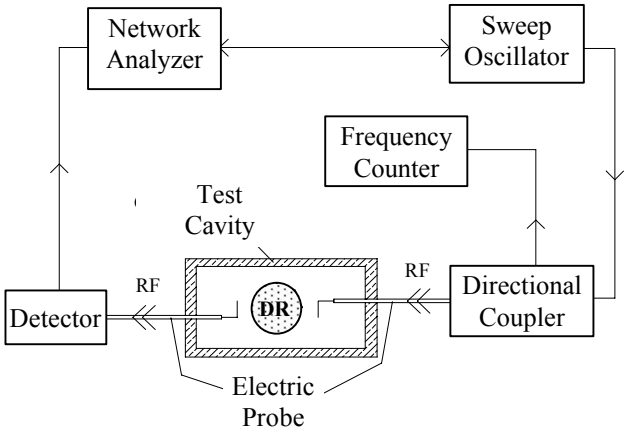

Figure 2. Experimental setup for measuring the microwave parameters

It is known that the final value for τ_f depends on the thermal expansion coefficient of the dielectric material, the thermal expansion coefficient of the surrounding material (aluminum) and the dielectric constant variation with temperature.

All microwave measurements were performed for a pure barium nanotitanate sample, another with 0.2 and the other with 0.4 mol % niobium oxide content. Their microwave performance was compared with measurements of a commercial imported sample from Trans-Tech with the same composition (barium nanotitanate).

3. RESULTS AND DISCUSSIONS

The Trans-Tech DR (Fig. 3a) and the ceramics without niobium addition (sintered at 1360 ^{o}C in air) (Fig. 3b) analyzed by X-ray diffraction have presented the barium nanotitanate as the major phase.

The analysis results of the samples with different amounts of Nb content, show the $Ba_2Ti_9O_{20}$ phase and another non identified compound (Fig. 3c and 3d). This other phase is formed by a compound of BaO - TiO_2 - Nb_2O_5 system that occurred during the ceramic synthesis and the sintering [5]. According to the literature this system can present a great number of ternary phases, however, the accurate composition and the structure of these phases were not still identified, due to the present small amount in the ceramic.

The analyses of X-ray diffraction for the ceramic with niobium addition showed that this contributes to the stabilization of the $Ba_2Ti_9O_{20}$ phase (Fig. 3). The ceramic with Nb addition of 0.4 mol % presented value of Q_c higher than the others, probably due to the fact of the ceramic to present significant amount of a composition formed between the niobium and the other components of the system, that was not possible to be identified so far. However the ceramic with 0.2 mol % Nb presented the least absolute value of τ_f . $Ba_2Ti_9O_{20}$ ceramics with Nb addition developed in this work presented better results of τ_f than that of Trans-Tech, measured in the same experimental condition. This fact might be due to the presence of small quantity of Nb and Sr in the Brazilian raw materials.

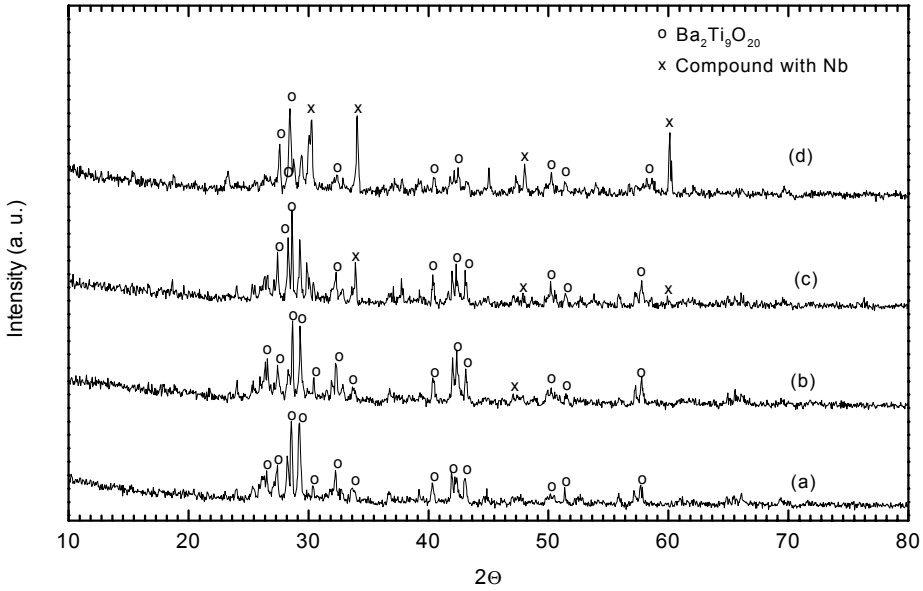

Figure 3. X-ray diffraction patterns for the investigated ceramics: (a) Trans-Tech DR, (b) without Nb addition, (c) with 0.2 mol % Nb, and (d) with 0.4 mol % Nb

The microstruture of the ceramic manufactured by Trans-Tech is shown in Fig. 4. presenting small grains and pores.

The scanning electronic microscopy (SEM) analyses of the ceramic fracture surfaces showed a high densification degree of the microstruture and the presence of few pores (Fig. 5). The grain sizes of the $Ba_2Ti_9O_{20}$ ceramic without Nb_2O_5 addition obtained in this work were larger than those which are present in the DR manufactured by Trans-Tech, probably due to presence of small amounts of Nb content in the raw materials. These defects are due to the packing powder flaws occurred during the compacting stage. The deffects can be minimized with the optimization of the grain size distribution of these powder mixtures, that can be obtained by a suitable procedure in the grinding stage. The densification degree and grain size increase with the amount of Nb_2O_5 added in the $Ba_2Ti_9O_{20}$ ceramic. This indicates that this addictive caused an increase in the system atomic mobility due to the thermal treatment used for the sintering and $Ba_2Ti_9O_{20}$ phase synthesis of these ceramics.

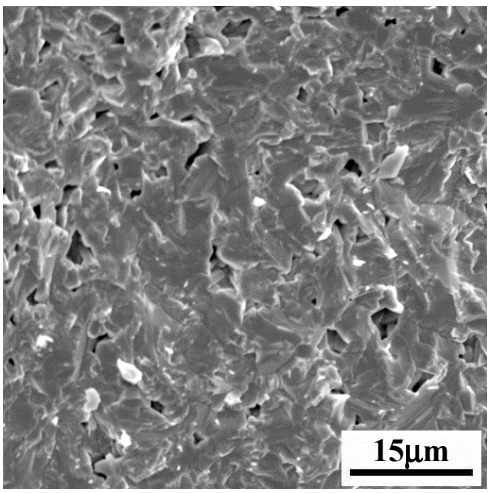

Figure.4. SEM micrographs of $Ba_2Ti_9O_{20}$ ceramic fracture surfaces from Trans-Tech

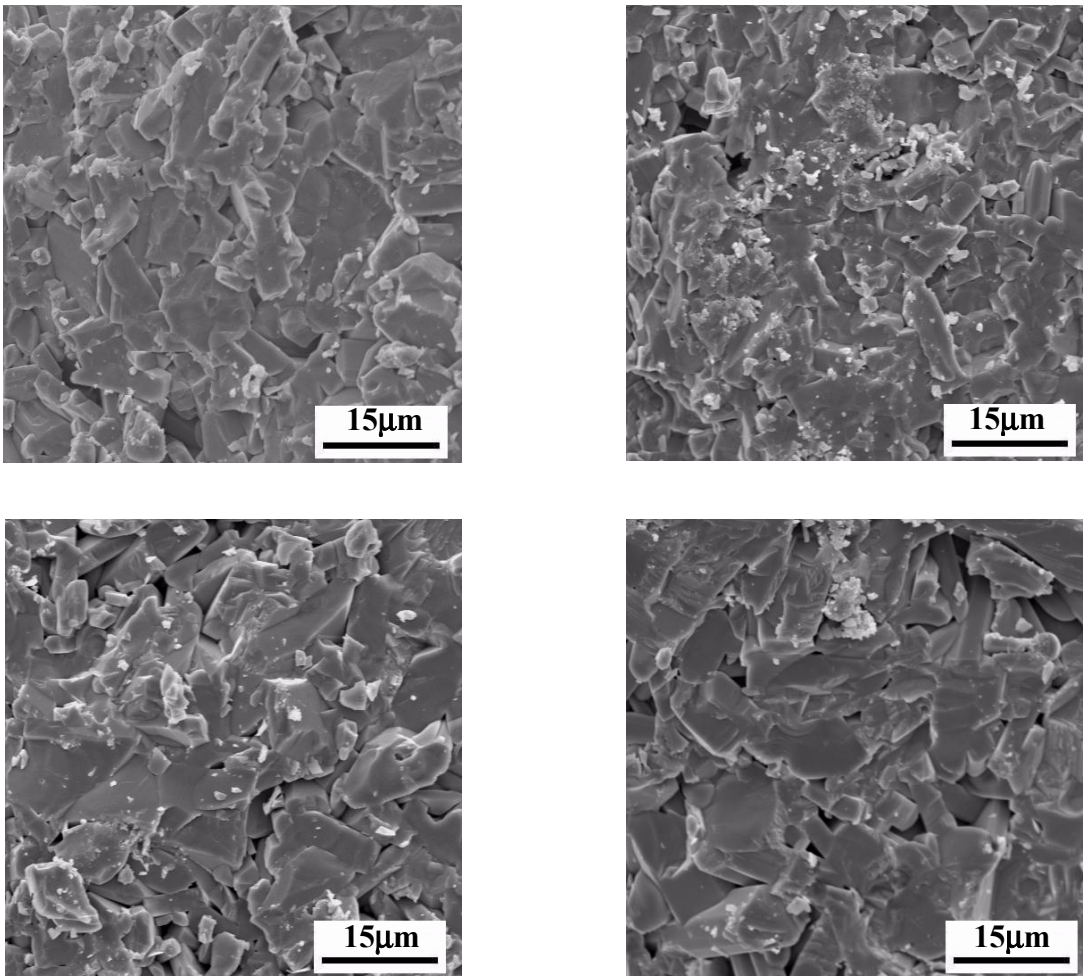

Figure.5 SEM micrographs of $Ba_2Ti_9O_{20}$ ceramic fracture surfaces: a) without Nb_2O_5 addition, b) with 0.1 mol% Nb_2O_5 , c) with 0.2 mol% Nb_2O_5 and d) with 0.4 mol% Nb_2O_5

The results of the dielectric measurements at microwave frequencies for the ceramics analyzed are presented in Table 1 and Fig. 6 shows the evolution of the resonant frequency variation with temperature during the thermal process in the range -20°C to +50°C, for the samples under tests. According to the Table 1 and confirmed by the curves in Fig. 6, the $Ba_2Ti_9O_{20}$ DRs–00Nb and DR-TT have a negative temperature coefficient. The ceramic 00Nb reached the frequency stability from 20°C on, while the Trans-Tech sample (DR-TT), from 35°C on. On the other hand, both 02Nb and 04Nb, that have niobium addition, presented a opposite behavior, that is to say, their resonant frequency increases with temperature, hence yielding a positive temperature coefficient. This fact might be due to a greater quantity of Nb in these DRs [5].

Table 1. Measured values of the microwave parameters for the ceramic resonators

DR code	$H \pm 0{,}01$ [mm]	$a \pm 0{,}01$ [mm]	$f \pm 3.0\times10^{-3}$ [GHz]	Q_L (max.)	$\varepsilon \pm 0{,}3$	τ_f [ppm/°C]
00Nb	5.71	6.67	5.78987	1,365	35.4	-3.7
02Nb	5.51	6.74	5.90985	1,372	35.3	+3.1
04Nb	5.65	6.90	6.06077	1,708	32.0	+14.8
DR-TT	4.80	6.04	6.52995	1,425	37.4	-6.5

00Nb: ceramic without Nb_2O_5 addition; 02Nb: ceramic with 0.2 mol% Nb; 04Nb: ceramic with 0.4 mol% Nb and DR-TT: Trans-Tech DR

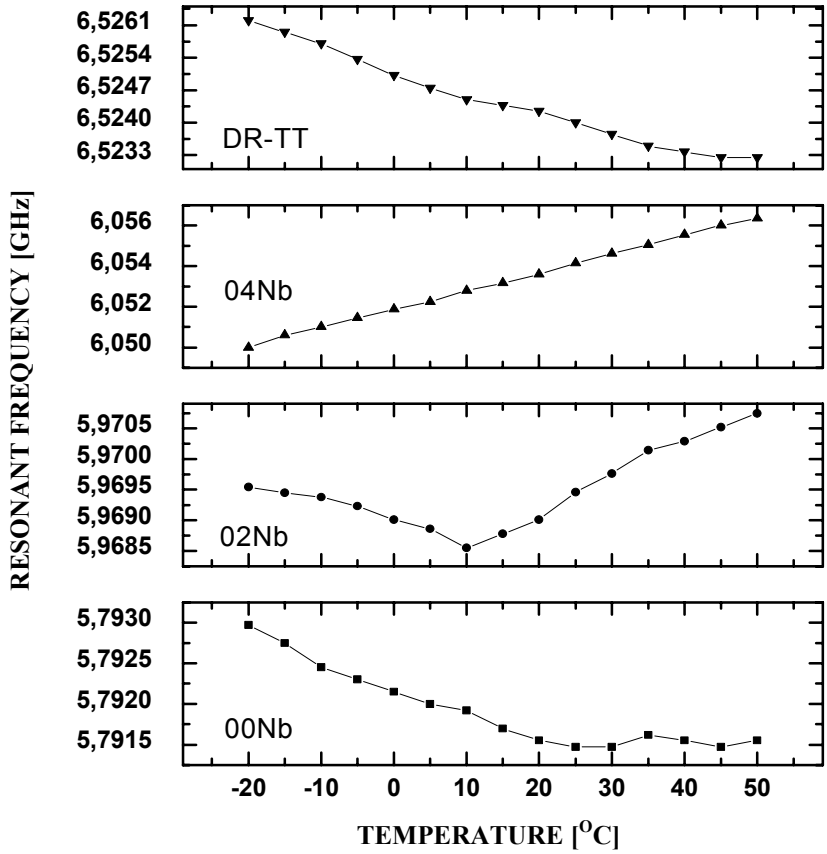

Figure 6. Measurements of resonant frequency variation with temperature in the range -20°C to +50°C for DRs referred in Table 1

4. CONCLUSIONS

The preliminary results obtained in this work are very promising for obtaining and $Ba_2Ti_9O_{20}$ phase stabilizing of dielectric resonators, including those with Nb addition in these ceramics. We can say that these results are better than were expected. The simultaneous synthesis and sintering procedure resulted in a suitable way to stabilize the $Ba_2Ti_9O_{20}$ phase. The values of the microwave parameters obtained in this work showed to be influenced by the amount of Nb_2O_5 added to the barium nanotitanate ceramic. Such results might be related to the Brazilian raw materials that have small amount of Nb and Sr. The general microwave properties of manufactured ceramics are similar to those presented by commercial imported samples; even concerning thermal frequency stability, 00Nb and 02Nb DRs obtained better values. Other niobium rate as well as other element addition (Sr and a Nb-Sr mixture) will be investigated in relation to dielectric properties in microwave frequencies.

REFERENCES

[1] D. Hennings; P. Schnabel, Philips J. Res., v.38, no. 6 (1983), p. 295.
[2] J.M. Wu; H.W. Wang,, J. Amer. Cer. Soc., v. 71, no. 10 (1988), p. 869.
[3] P. Tandon; J. Goyette; Y.K.Bose, J. Mater. Sci. Let., v. 14 (1995), p. 1373.
[4] H.M. O'Bryan Jr; J. Thomson Jr, J. Amer. Cer. Soc., v. 66, no. 12 (1983), p. 66
[5] M.C.A. Nono; P.J. Castro, 36th Brazilian Ceramic Meeting, (1992), p. 609.
[6] P.J. Castro; M.C.A. Nono, J. Microwave and Optoeletronics, v.4, n.1 (1999), p. 27.
[7] P.J. Castro. Doctor Thesis, POLI/USP, Brazil, 1989.